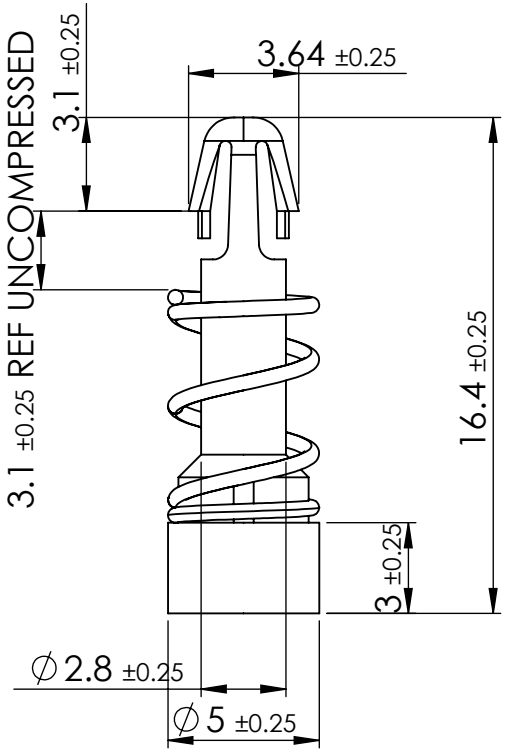

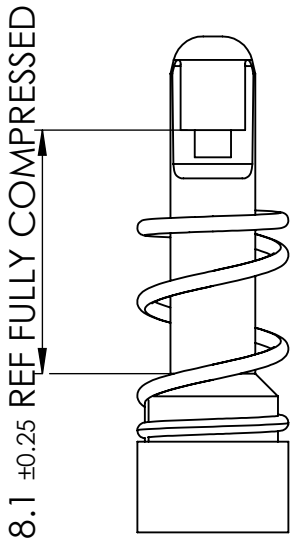

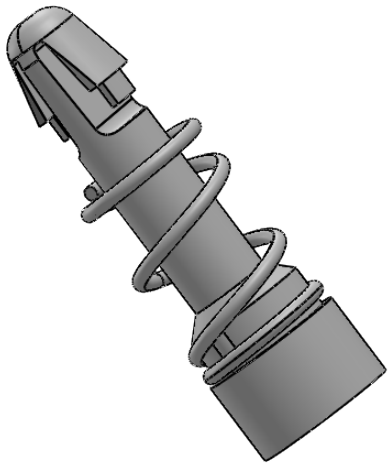

ESSENTRA COMPONENTS

© 2013 Essentra Components. All rights reserved.
Registered in England, Company No. 547495.
Registered Office: Essentra plc
Langford Locks, Kidlington, Oxford, OX5 1HX

Condition of Sale can be found on our website: essentra.com.

Essentra Components does not warrant that the files will be error free and may create new versions ("Upgrades") at any time, which may correct such errors. Essentra Components has no obligation to notify you of such upgrades. Any upgraded file will be published to the website, when it becomes available.

You are not permitted to load any of the files on to a network server for the purposes of distribution to one or more other computer(s) on that network or to effect such distribution. Essentra Components shall not be liable for any loss or damage whatsoever or however caused, arising directly or indirectly from the use of the files.

UNCONTROLLED COPY

STATUS: APPROVED DRAWING

UNLESS OTHERWISE STATED

ALL DIMENSIONS IN mm | DO NOT SCALE

LINEAR TOLERANCE

SIZE	(0)	(0.0)	(0.00)
0-10	±0.5	±0.15	±0.10
>10-30	±0.5	±0.20	±0.15
>30-50	±0.5	±0.30	±0.20
>50-100	±0.8	±0.50	±0.25
>100-200	±1.5	±0.80	±0.40
>200-300	±2.0	±1.20	±0.80
>300-500	±3.0	±2.00	±1.00
>500	±5.0	±3.00	±1.50

THIRD ANGLE PROJECTION

ANGULAR TOLERANCE ±0.5 DEGREES
UNSPECIFIED RADII 0.25mm
DRAFT ANGLE 0.5 DEGREES
DIMENSIONS IN BRACKETS [ ] ARE IN INCHES FOR REFERENCE ONLY

CREATE DATE	06.10.2022	ORG. SCALE	5:1
ITEM CODE	10010693	MATERIAL	NYLON;STEEL
LEGACY NUMBER	HSR-1	COLOUR / FINISH	NATURAL

TITLE:
PUSH-IN RIVET NYLON;STEEL
-

DWG. No.	SHEET	ISSUE
10010693	1 of 2	1

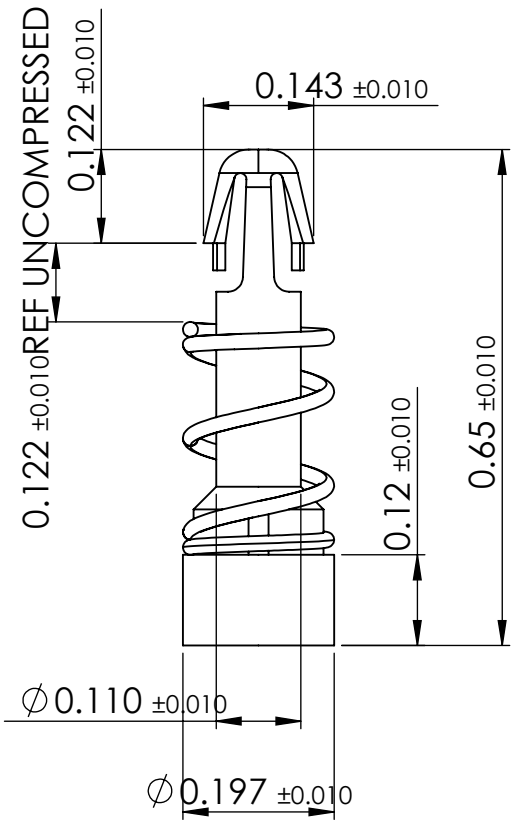

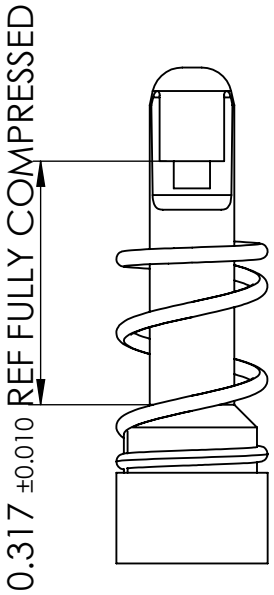

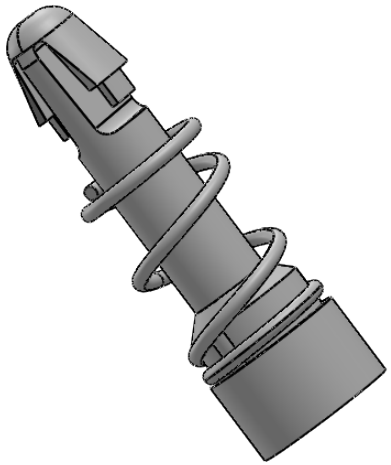

ESSENTRA COMPONENTS

© 2013 Essentra Components. All rights reserved.
Registered in England, Company No. 547495.
Registered Office: Essentra plc
Langford Locks, Kidlington, Oxford, OX5 1HX

Condition of Sale can be found on our website: essentra.com.

Essentra Components does not warrant that the files will be error free and may create new versions ("Upgrades") at any time, which may correct such errors. Essentra Components has no obligation to notify you of such upgrades. Any upgraded file will be published to the website, when it becomes available.

You are not permitted to load any of the files on to a network server for the purposes of distribution to one or more other computer(s) on that network or to effect such distribution. Essentra Components shall not be liable for any loss or damage whatsoever or however caused, arising directly or indirectly from the use of the files.

UNCONTROLLED COPY

STATUS: APPROVED DRAWING

UNLESS OTHERWISE STATED

ALL DIMENSIONS IN inches | DO NOT SCALE

LINEAR TOLERANCE

SIZE	(0.00)	(0.000)	(0.0000)
0 - 0.394	±0.020	±0.006	±0.004
>0.394 - 1.181	±0.020	±0.008	±0.006
>1.181 - 1.969	±0.020	±0.012	±0.008
>1.969 - 3.937	±0.031	±0.020	±0.010
>3.937 - 7.874	±0.059	±0.031	±0.016
>7.874 - 11.811	±0.079	±0.047	±0.031
>11.811 - 19.685	±0.118	±0.079	±0.039
>19.685	±0.197	±0.118	±0.059

THIRD ANGLE PROJECTION

ANGULAR TOLERANCE ±0.5 DEGREES
UNSPECIFIED RADII 0.010 inch
DRAFT ANGLE 0.5 DEGREES
DIMENSIONS IN BRACKETS [ ] ARE IN INCHES FOR REFERENCE ONLY

CREATE DATE	06.10.2022	ORG. SCALE	1:1
ITEM CODE	10010693	MATERIAL	NYLON;STEEL
LEGACY NUMBER	HSR-1	COLOUR / FINISH	NATURAL

TITLE:
PUSH-IN RIVET NYLON;STEEL
-

DWG. No.	SHEET	ISSUE
10010693	2 of 2	1